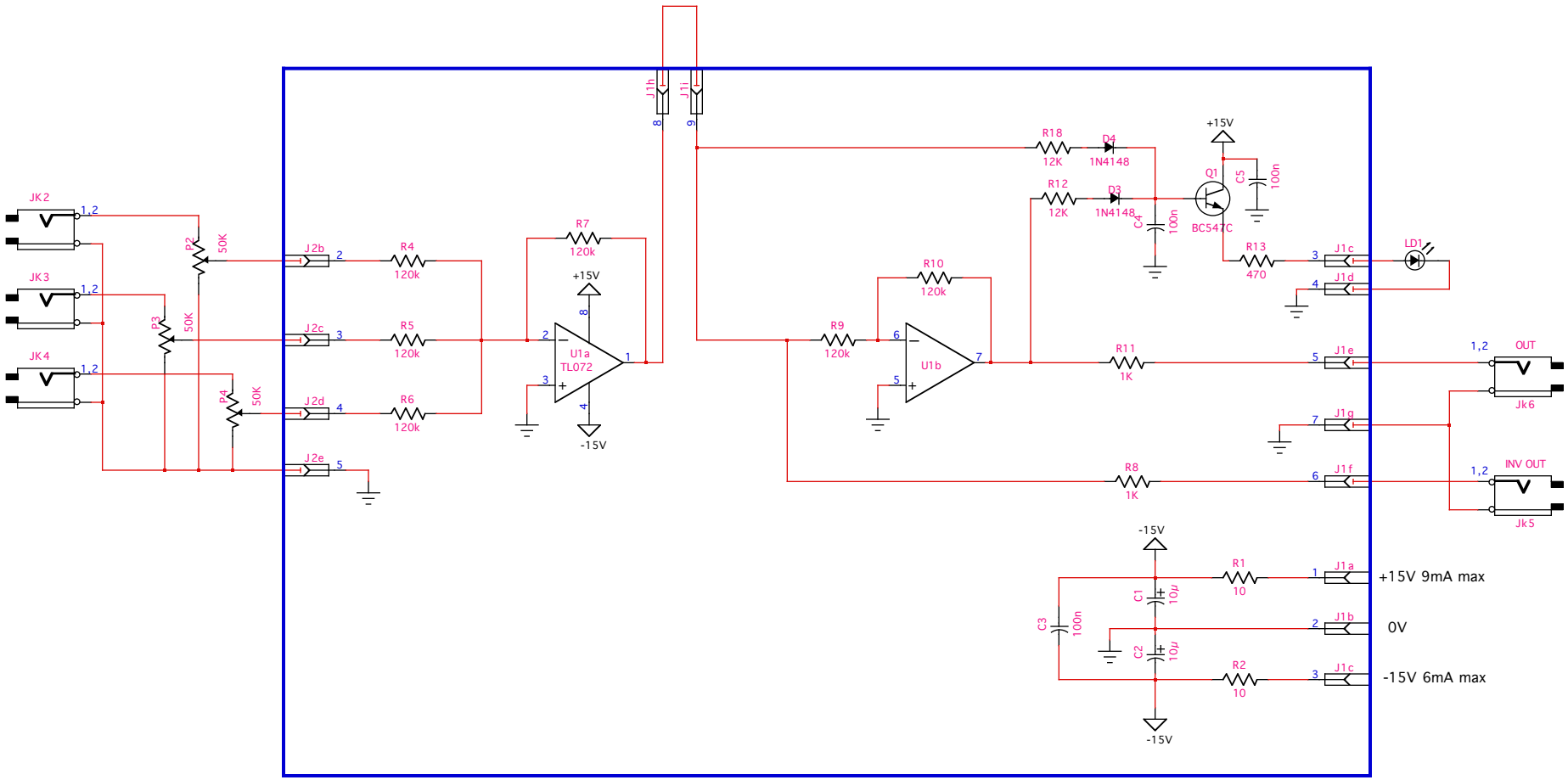

3 input audio/CV mixer

drawn by : Yves Usson
august 2005